ARDUINO

Lec5

Written by : Mohammad Prince

❑ Introduction

- In this lecture , we will divide this lecture into 5 parts :
  1. Ports of Arduino (Port B , Port C , Port D) .
  2. Ultra Sonic Sensor .
  3. UART (for sending and receiving data).
  4. Connecting to Bluetooth .
  5. Application for ports and 7-segments .

PORTS IN ARDUINO

❑ PORTS OF ARDUINO

- Port is a group of pins in Arduino , so that we have three ports in Arduino , Port B , Port C, Port D.
- Each port has some registers of 1 byte (eight bits) :
  1. DDR (name of port(B or C or D)) → to determine which is the input and which is the output .
  2. PORT (name of port(B or C or D)) → to output any data .
  3. PIN (name of port(B or C or D)) → if the pins are inputs , PIN receives from the user .
- For Arduino UNO :
  - B (digital pin 8 to 13)
  - C (analog input pins)
  - D (digital pins 0 to 7)
- To set a pin for : (important for DDR)
  1. Input → 0
  2. Output → 1

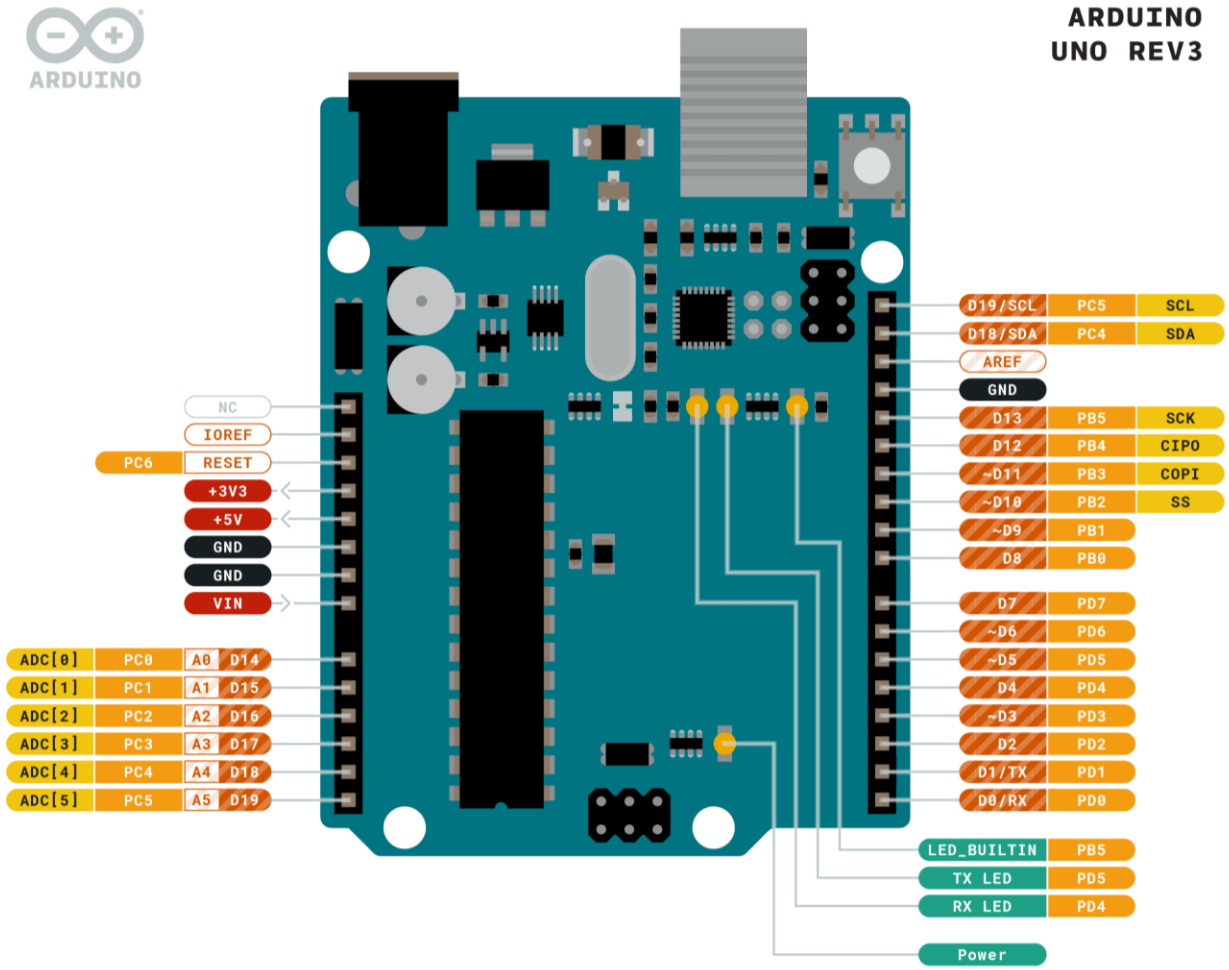

Port Manipulation

✓ EX :- a decade counter with a 1s delay

```
void setup() {
  // put your setup code here, to run once:
  DDRD=0b00001111;
}

void loop() {
  // put your main code here, to run repeatedly:
  PORTD=0b00000000;
  for (char i=0;i<10;i++){
    delay(1000);
    PORTD++;

  }
}
```

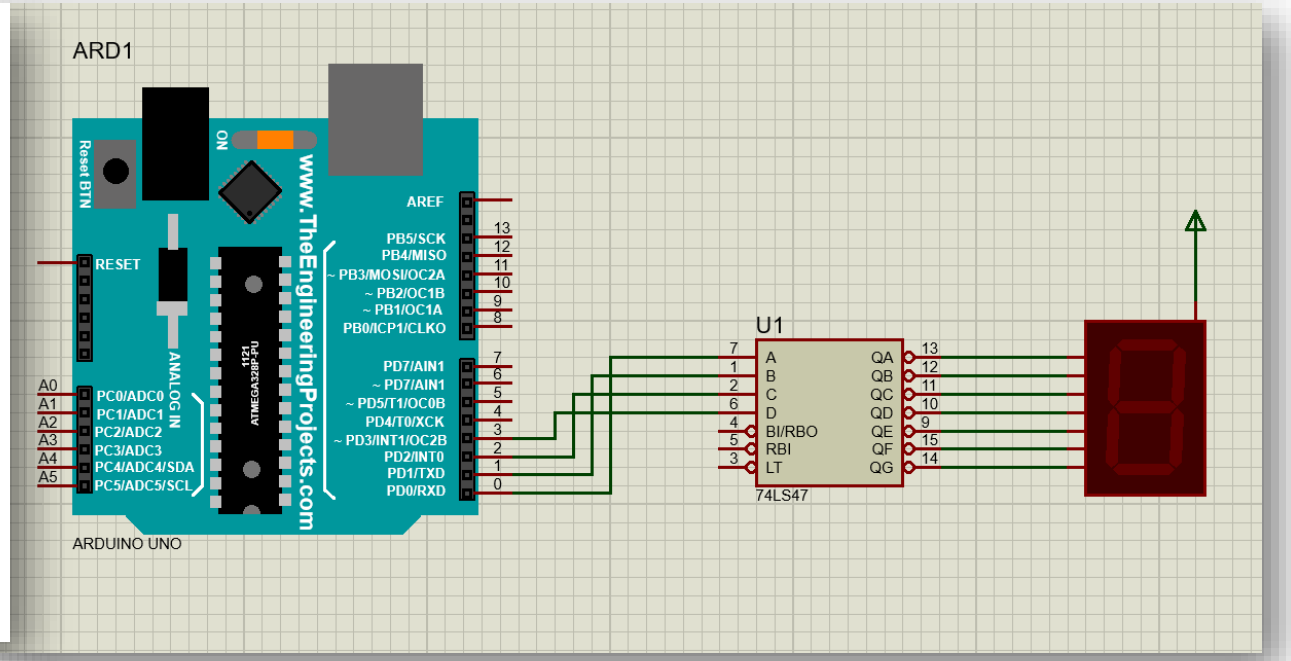

→ 0b (the eight bits of the register) → to get the input in binary .

✓ EX :- SECONDS COUNTER ??

```
bool flag=false;
void setup() {
  // put your setup code here, to run once:
  DDRD=0b00001111;
  DDRB=0b00001111;
  PORTB=0b00000000;
}

void loop() {
  // put your main code here, to run repeatedly:
  PORTD=0b00000000;
  if (!flag){
    flag=true;
  }
  else {
    if (PORTD==0b00000000){
      PORTB++;
    }
    if (PORTB==0b00000110){
    PORTB=0b00000000;
    }
  }
  for (char i=0;i<10;i++){
    delay(1000);
    PORTD++;
  }
}
```

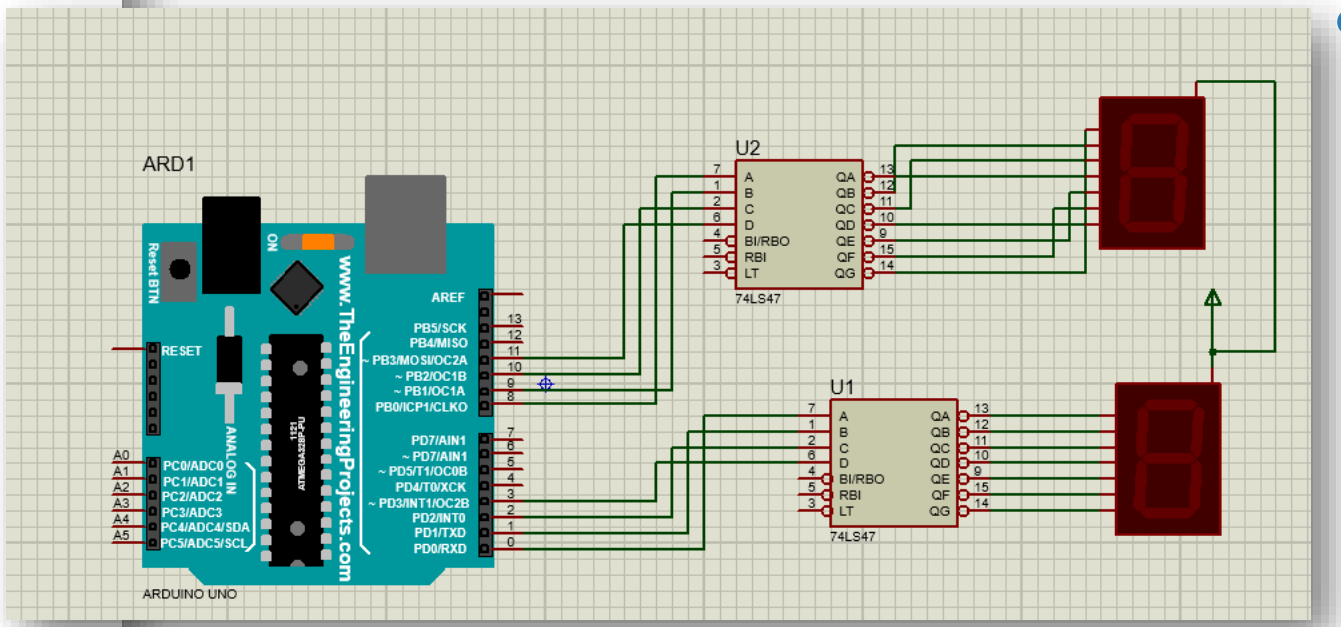

ULTRASONIC SENSOR

- At the first , we must learn some info about ultrasonic sensor .
- Is a sensor which sends rays which reflect when some body passes in front of it so the rays will be reflected again to the sensor (the sensor receives the reflected rays) .

- The ultrasonic sensor has some pins :

  1. VCC
  2. GND (ground)
  3. TRIG (is connected to the a clock pulse to run the sensor)
  4. Echo (returns the duration of waves to return)

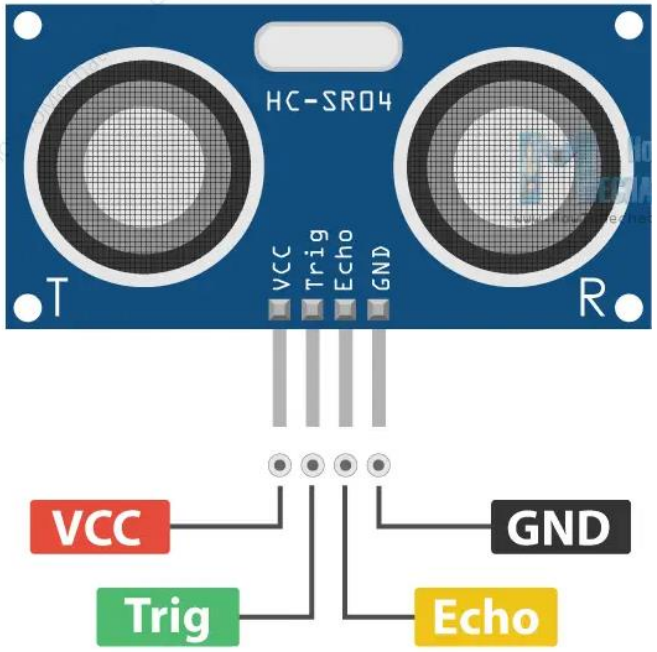

- The speed of the waves is 343 m/s (speed of sound)
- V(speed) = 343 m/s = .0343 cm/µs $= \frac{d\ (distance)}{t\ (duration)}$

✓ EX :- an device measures the distance of the body which pass in front in it ??

```
#define TRIGER 7
#define ECHO 6
#include <LiquidCrystal.h>
unsigned long d;
long duration, inches, cm;
int rs=13,en=12,d7=0,d6=1,d5=2,d4=3;
LiquidCrystal lcd(rs, en, d4, d5, d6, d7);
void setup() {
  // put your setup code here, to run once:
  lcd.begin(16,2);
  pinMode(TRIGER,OUTPUT);
  pinMode(ECHO,INPUT);
}
void loop() {
  // put your main code here, to run repeatedly:
  digitalWrite(TRIGER, LOW);
  delayMicroseconds(2);
  digitalWrite(TRIGER, HIGH);
  delayMicroseconds(10);
  digitalWrite(TRIGER, LOW);
  duration=pulseIn(ECHO,HIGH);
  // duration is t(sending)+t(receiving)=2t(sending)=2t(receiving)
  d=duration*(0.0343)/2;
  lcd.print(d);
  lcd.print(" cm");

  delay(500);
  lcd.clear();
}
```

To run the ultrasonic

Duration is calculated in micro seconds

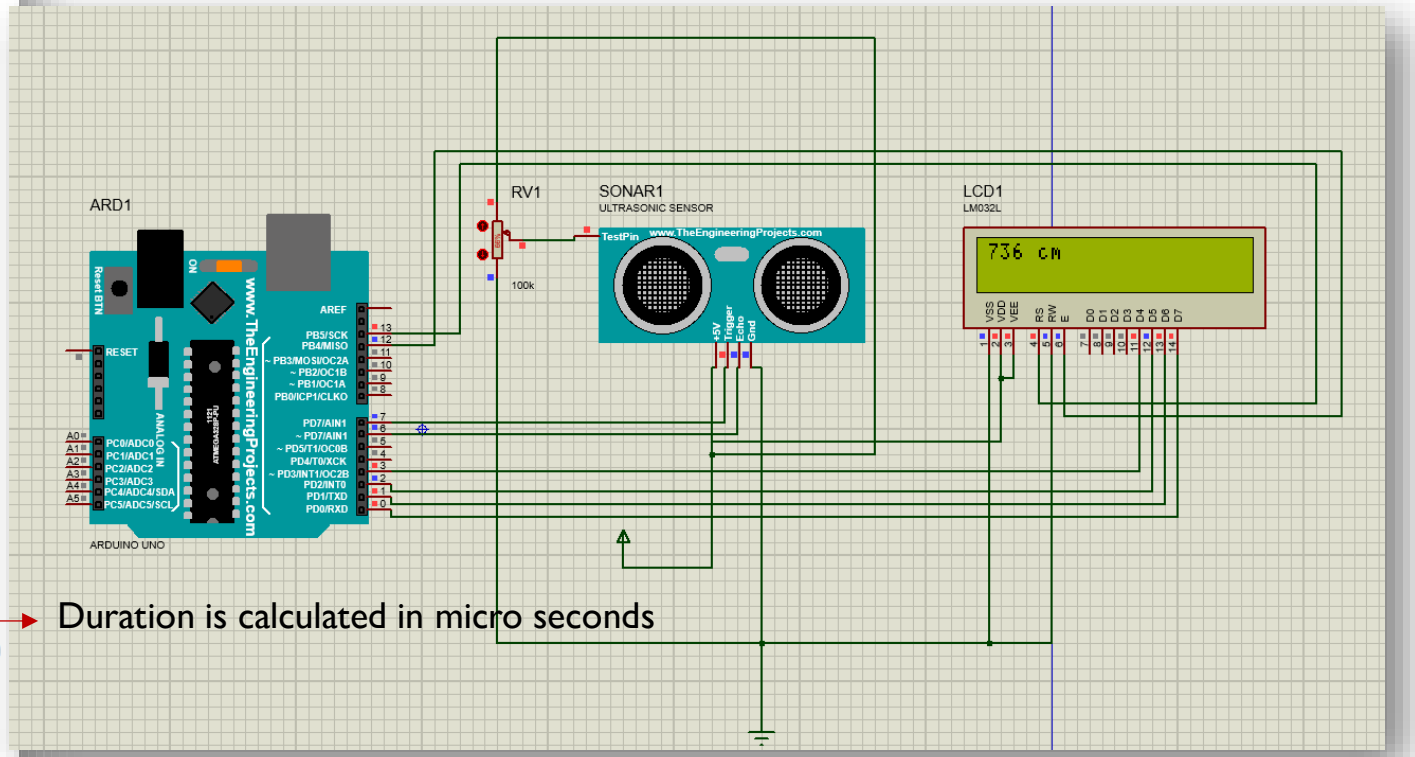

UART

(FOR SENDING AND RECEIVING DATA)

- We have some properties for sending or receiving using TX or RX for Arduino such as :

  Baud Rate is the rate in which the data is moved . (always 9600 bits / sec) .

- In the start of the moving data in general (sending or receiving) , There is a start bit (0) and at the end , There is a stop bit (1) .

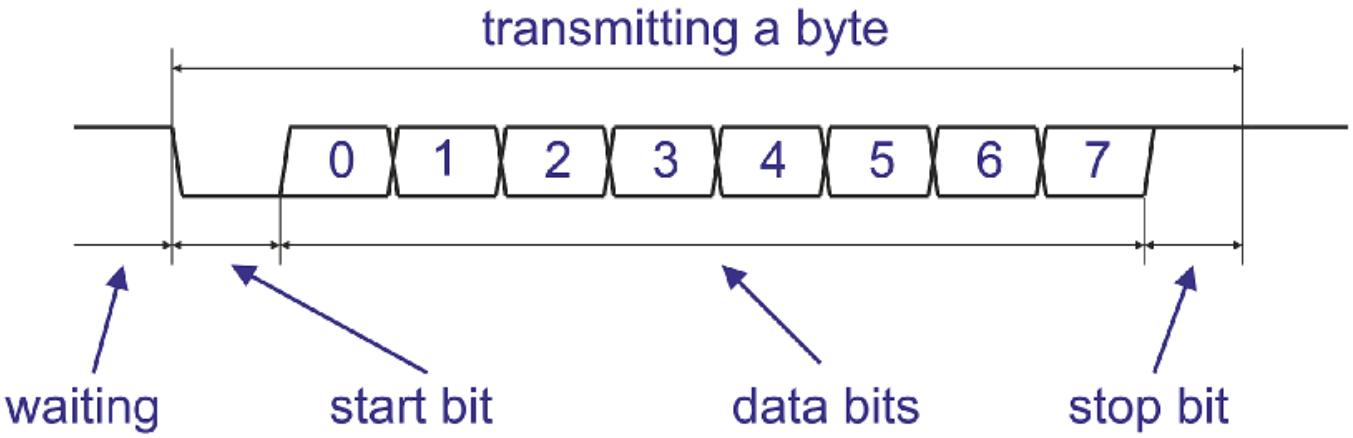

- These pulses have been outputted to a buffer register of Tx or Rx , serially .

UART Frame Format

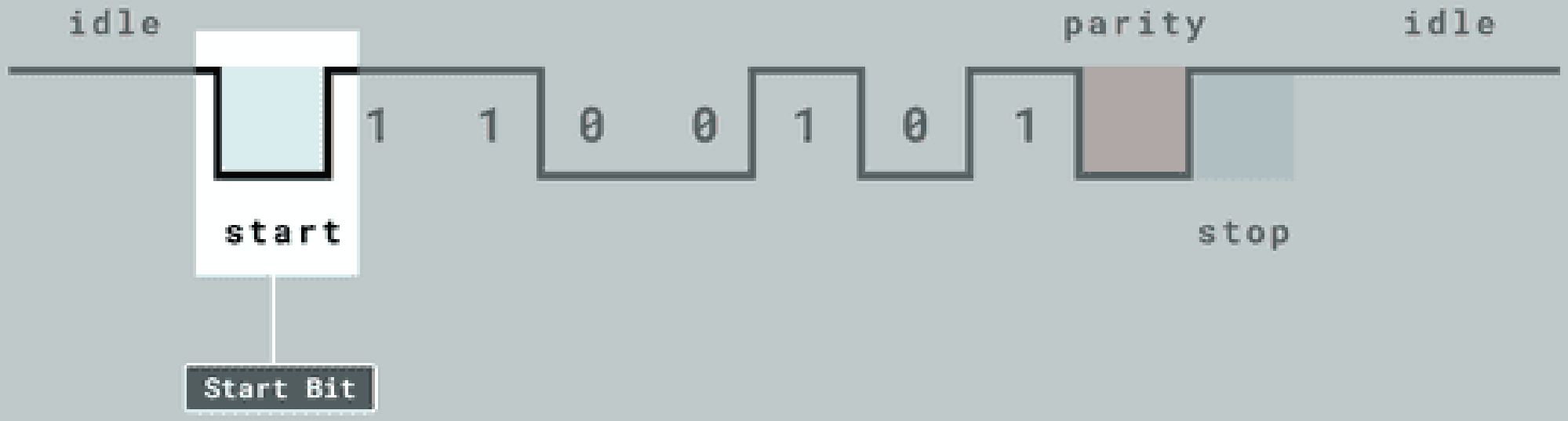

✓ EX :- check the output of serial (Tx , Rx)

```
void setup() {
  // put your setup code here, to run once:
  Serial.begin(9600);


}
char s;
void loop() {
  // put your main code here, to run repeatedly:
  if (Serial.available()){
    s=Serial.read();
    Serial.print(s);
    delay(100);
  }

}
```

Set the baud Rate (rate of sending or receiving the data)

Check If the buffer has received data or not ?

Reading the data from buffer register
then print it on the serial on Tx of Arduino.

To check in proteus if the data has been sent on the Tx or not ,use the Virtual Terminal and connect the Tx of VT to Rx of Arduino and Rx of VT to Tx of Adruino .

BLUETOOTH

- We can use the Bluetooth with the Arduino using a chip of Bluetooth module (HC - 05) .
- We connect the VCC to the power supply and the ground to GND and enable to VCC .
- Then , we connect the Tx of the chip to RX of Arduino and RX of chip to TX of Arduino , so that we get or send the data , serially .
- In proteus , VCC and GND are connected automatically .

✓ EX :- Controlling a motor using Bluetooth ??

```
#define TX 0
#define RX 1

void setup() {
  // put your setup code here, to run once:
  Serial.begin(9600);
  DDRB=0b00001111;
}
char s;
void loop() {
  // put your main code here, to run repeatedly:
  if (Serial.available()){
    s = Serial.read();
    if (isalpha(s)){
      if (s=='R'){
        PORTB=0b00001001;
      }
      else if(s=='L'){
        PORTB=0b00000110;
      }
      else if(s=='F'){
        PORTB=0b00000101;
      }
      else if(s=='B'){
        PORTB=0b00001010;
      }
      else {
        PORTB=0b00000000;
      }
    }
  }
}
```

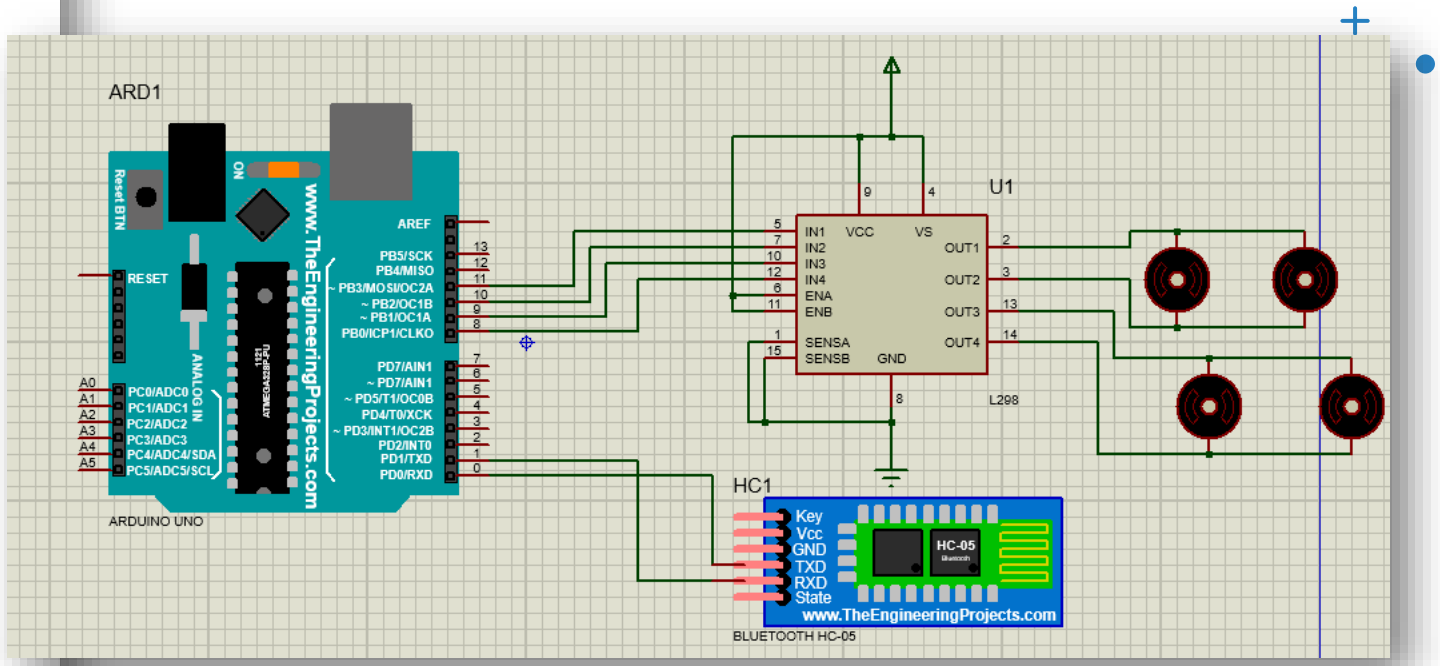

AN APPLICATION FOR DOUBLE 7-SEGMENT ?? (SECONDS COUNTER)

```
#define EN2 9
#define EN1 10
void setup() {
  // put your setup code here, to run once:
  DDRD=0b00001111;
  PORTD=0b00000000;
  pinMode(EN1,OUTPUT);
  pinMode(EN2,OUTPUT);
}
int t1;
void loop() {
  // put your main code here, to run repeatedly:
  for (char i=0;i<=5;i++){
    for (char j=0;j<=9;j++){
      t1=millis();
      while((millis()-t1)<1000){

        digitalWrite(EN2,LOW);
        PORTD=i;
        digitalWrite(EN1,HIGH);

        delay(10);
        digitalWrite(EN1,LOW);
        PORTD=j;
        digitalWrite(EN2,HIGH);

        delay(10);
      }
    }
  }
}
```

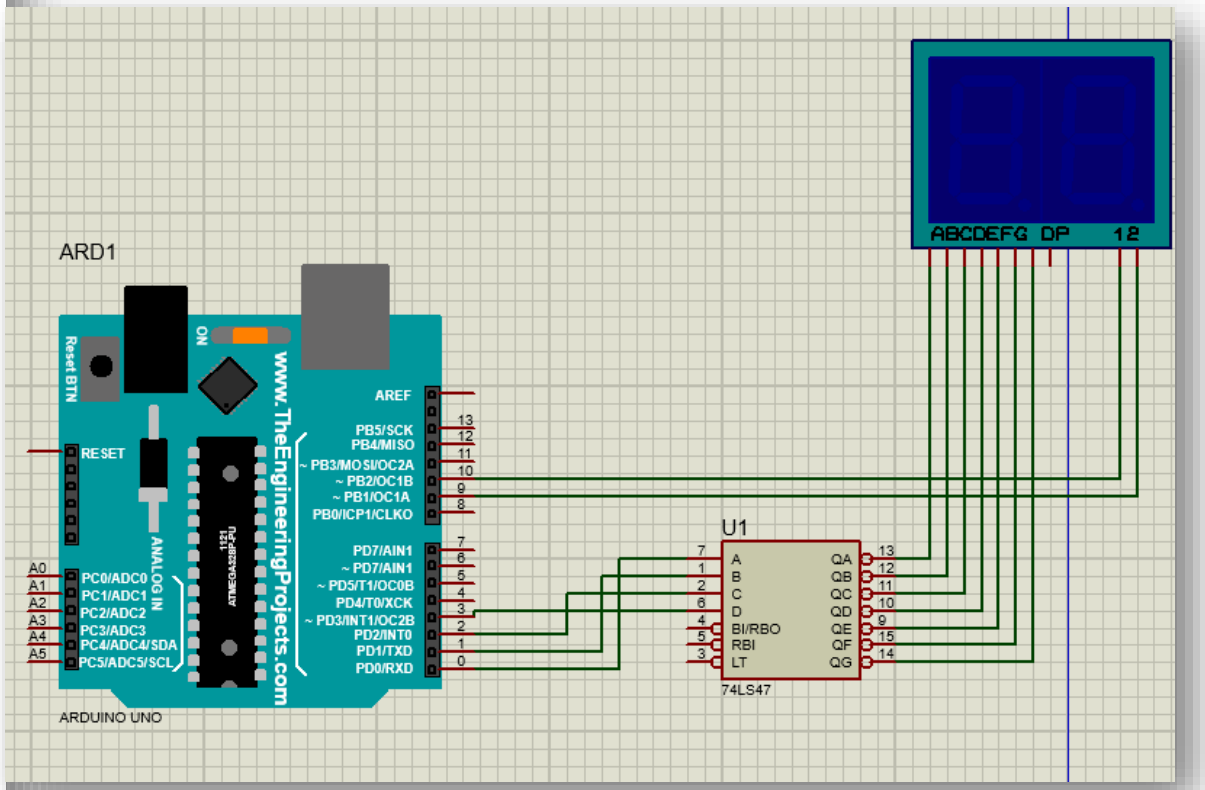

THANK YOU

FOR PAYING ATTENTION